Quality Maker®
Restarsolar, power the life

GLOBALPROFESSIONAL PV PRODUCTS INTEGRATED SOLUTIONS SUPPLIER



WWW.RESTARSOLAR.COM

RTM010M

36 Cells
Mono-crystalline

10W
Power output

11.90%
The Highest Efficiency

±3%
Tolerance



RTM010M

RTM010M series is produced with high efficiency multi-busbar cells, which can reduce the module internal power loss to improve its conversion efficiency, as well as lower the failure risk caused by cracks and broken busbar to enhance the module reliability. Combined with half-cell technology, the module is highly resistant to hot-spotcrisis caused by shadow effect.

High Reliability
Multi-busbar technology can effectively reduce the reliability risk caused by cells cracks and broken busbar.

Anti-PID Resistance
Prominent anti-PID performance reduces the power degradation, leading to higher energy yield and lower LCOE.

Durability Against Extreme Conditions
Certified to resist high salt mist and ammonia conditions.

High Efficiency
Multi-busbar technology can reduce the module internal power loss to improve the module conversion efficiency significantly.

Low-Light Performance
With high transmittance and anti-reflective 3.2mm tempered glass,the module has stronger performance under low light circumstances.

High Mechanical Strength
2400 Pa
5400 Pa
Certified to withstand: high wind load(2400Pa) and snow load(5400Pa).

0.5% Annual Degradation over 30 years

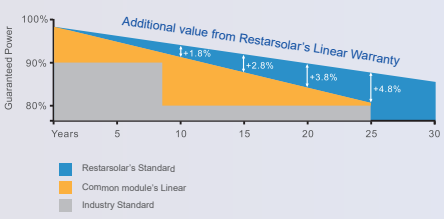

LINEAR PERFORMANCE WARRANTY

12 Year Product Warranty
25 Year Linear Power Warranty

Full range of products and certification systems

ISO 9001/14001 TUV PID-FREE CE IEC 61215/61730/61701/62716

.5

Restarsolar, power the life

GLOBALPROFESSIONAL PV PRODUCTS INTEGRATED SOLUTIONS SUPPLIER

RTM010M

WWW.RESTARSOLAR.COM

Dimension of PV Modules Unit: mm

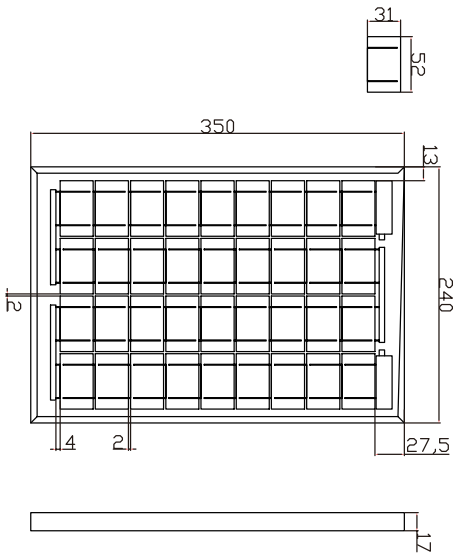

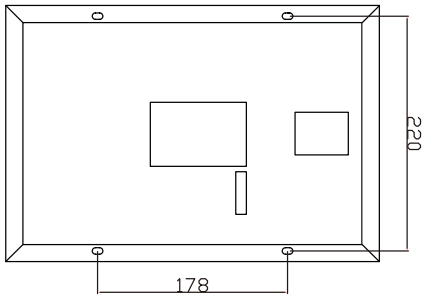

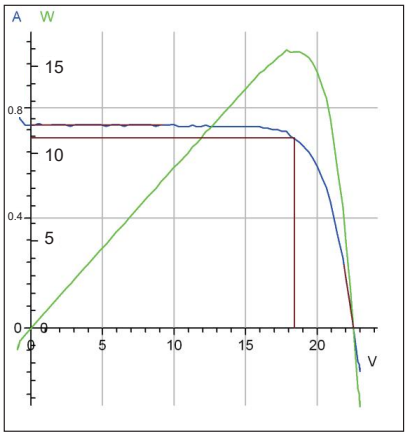

ELECTRICAL DATA(STC)

Rated Power in Watts-Pmax(Wp)	10
Open Circuit Voltage-Voc(V)	23.40
Short Circuit Current-Isc(A)	0.57
Maximum Power Voltage-Vmp(V)	19.50
Maximum Power Current-Imp(A)	0.52
Module Efficiency	11.90%

STC: Irradiance 1000 W/m², Cell Temperature 25°C,Air Mass AM1.5 according to EN 60904-3.

ELECTRICAL DATA(NOCT)

Maximum Power-Pmax(Wp)	7.56
Open Circuit Voltage-Voc (V)	21.93
Short Circuit Current-Isc(A)	0.46
Maximum Power Voltage-Vmp(V)	18.16
Maximum Power Current-Imp(A)	0.42

NOCT: Irradiance at 800 W/m²,Ambient Temperature 20°C, Wind Speed 1m/s.

MECHANICAL DATA

Solar cells	Mono-crystalline 52*31.2mm
Cell configuration	36 cells(4*9)
Module dimensions	240*350*17mm
Weight	1.0kg
Front Cover	3.2mm Tempered Glass
Frame Material	Anodized Aluminum Alloy
J-BOX	IP65 or IP67, 1 Diodes
Cable	0.5mm²(IEC), 800mm

TEMPERATURE & MAXIMUM RATINGS

Nominal Operating Cell Temperature(NOCT)	45°C±2°C
Temperature Coefficient of Voc	-0.32%/°C
Temperature Coefficient of Isc	0.05%/°C
Temperature Coefficient of Pmax	-0.39%/°C
Operational Temperature	-40~+85°C
Maximum System Voltage	1000V(IEC)/600V(UL)
Max Series Fuse Rating	15A
Limiting Reverse Current	15A

Add: No: 30 Yongshun Road, Zhulin Town, Jintan District, Changzhou, Jiangsu Province, China
E-mail: info@restarsolar.com
Web:www.restarsolar.com