RTPVCC
MC4 connector

WWW.RESTARSOLAR.COM

Quality Maker®
Restarsolar, power the life



WSPVCC TYPE 1



WSPVCC TYPE 2



WSPVCC TYPE 3



Note: Solid pins are also available.

Application

- Simple on-site processing!
- Acomodates PV cable with different insulation diameters.
- Mating safety provided bykeyed housings.
- Multiple plugging and unplugging cycles .
- High current carrying capacity.

Technical Parameters

Order NO.	Part P/N		Cable special	
	Connector	Terminal	Conductor size (mm²)	Cable OD (Dmm)
RTPVCC-1	RTPVCC-M	RTPVCC-T1	AWG 14(2.5 mm²)	Φ4.5-Φ8.5
RTPVCC-2		RTPVCC-T2	AWG 12(4.0 mm²)	
RTPVCC-3		RTPVCC-T3	AWG 10(6.0 mm²)	
RTPVCC-4	RTPVCC-F	RTPVCC-T4	AWG 14(2.5 mm²)	Φ4.5-Φ8.5
RTPVCC-5		RTPVCC-T5	AWG 12(4.0 mm²)	
RTPVCC-6		RTPVCC-T6	AWG 10(6.0 mm²)	

Technical Parameter	
Rated current	30A(45A if with solid pins)
Rated voltage	1500v DC
Test voltage	6000V(50Hz,1min)
Overvoltage type/pollution degree	CAT II/2
Contact resistance of plug connector	1 mΩ
Contact material	Copper,Tin-plated
Insulation material	PPO/PC
Degree of protection	IP2X/IP67
Flame class	UL94-VO
Safety class	II
Suitable cable	OD 4.5-8.5(2.5-6.0 mm²)
Insertion force/withdrawal force	≤50N/≥50N
Connecting system	Crimp connection
Temperature range	-40°C~+125°C

Tel:+86 512-66292101 Email:info@resunsolar.com

RTPVCC-1500
MC4 connector

WWW.RESTARSOLAR.COM

Quality Maker®
Restarsolar, power the life



Structural Characteristics

- Simple on-site processing!
- Acomodates PV cable with different insulation diameters.
- Mating safety provided bykeyed housings.
- Multiple plugging and unplugging cycles .
- High current carrying capacity.



Note: Solid pins are also available.



Specifications

Order NO.	Part P/N		Cable special	
	Connector	Terminal	Conductor size (mm²)	Cable OD (Dmm)
RTPVCC-1	RTPVCC-M	RTPVCC-T1	AWG 14(2.5 mm²)	Φ4.5-Φ8.5
RTPVCC-2		RTPVCC-T2	AWG 12(4.0 mm²)	
RTPVCC-3		RTPVCC-T3	AWG 10(6.0 mm²)	
RTPVCC-4	RTPVCC-F	RTPVCC-T4	AWG 14(2.5 mm²)	Φ4.5-Φ8.5
RTPVCC-5		RTPVCC-T5	AWG 12(4.0 mm²)	
RTPVCC-6		RTPVCC-T6	AWG 10(6.0 mm²)	

Technical Parameter	
Rated current	30A(45A if with solid pins)
Rated voltage	1500v DC
Test voltage	6000V(50Hz,1min)
Overvoltage type/pollution degree	CAT II/2
Contact resistance of plug connector	1 mΩ
Contact material	Copper,Tin-plated
Insulation material	PPO/PC
Degree of protection	IP2X/IP67
Flame class	UL94-VO
Safety class	II
Suitable cable	OD 4.5-8.5(2.5-6.0 mm²)
Insertion force/withdrawal force	≤50N/≥50N
Connecting system	Crimp connection
Temperature range	-40°C~+125°C

Tel:+86 512-66292101 Email:info@resunsolar.com

RTPVPC
PANEL MOUNTED
MC4 SOLAR CONNECTOR

Quality Maker®
Restarsolar, power the life

WWW.RESTARSOLAR.COM





Note: Solid pins are also available.

Application

- Simple on-site processing!
- Acomodates PV cable with different insulation diameters.
- Mating safety provided bykeyed housings.
- Multiple plugging and unplugging cycles .
- High current carrying capacity.
- TUV and UL approved.

Technical Parameters

Order NO.	Part P/N		Cable special	
	Connector	Terminal	Conductor size (mm²)	Cable OD (Dmm)
RTPVPC-1	RTPVPC-M	RTPVPC-T1	AWG 14(2.5 mm²)	Φ4.5-Φ8.5
RTPVPC-2		RTPVPC-T2	AWG 12(4.0 mm²)	
RTPVPC-3		RTPVPC-T3	AWG 10(6.0 mm²)	
RTPVPC-4	RTPVPC-F	RTPVPC-T4	AWG 14(2.5 mm²)	Φ4.5-Φ8.5
RTPVPC-5		RTPVPC-T5	AWG 12(4.0 mm²)	
RTPVPC-6		RTPVPC-T6	AWG 10(6.0 mm²)	

Technical Parameter	
Rated current	30A(45A if with solid pins)
Rated voltage	1000v DC
Test voltage	6000V(50Hz,1min)
Overvoltage type/pollution degree	CAT III/2
Contact resistance of plug connector	1 mΩ
Contact material	Copper,Tin-plated
Insulation material	PPO/PC
Degree of protection	IP2X/IP67
Flame class	UL94-VO
Safety class	II
Suitable cable	OD 4.5-8.5(2.5-6.0 mm²)
Insertion force/withdrawal force	≤50N/≥50N
Connecting system	Crimp connection
Temperature range	-40°C~+125°C

Tel:+86 512-66292101 Email:info@resunsolar.com

RTPVT2

2 TO 1 MC4 SOLAR CONNECTOR

Quality Maker®
Restarsolar, power the life

WWW.RESTARSOLAR.COM



Application

- Simple on-site processing.
- Acomodates PV cable with different insulation diameters.
- Mating safety provided bykeyed housings.
- Multiple plugging and unplugging cycles.
- High current carrying capacity.

Technical Parameter	
Rated current	30A
Rated voltage	1000V DC
Test voltage	6000v(50Hz, 1 min)
Overvoltage type/pollution degree	CAT III /2
Contact resistance of plug connector	1 mΩ
Contact material	Copper,Tin-plated
Insulation material	PA/PPO
Degree of protection	IP2*/IP67
Flame class	UL94-VO
Safety class	II
Insertion Force	≤50N
Withdrawal Force	≥50N
Temperature Range	-40°C~+110°C

Dimensions

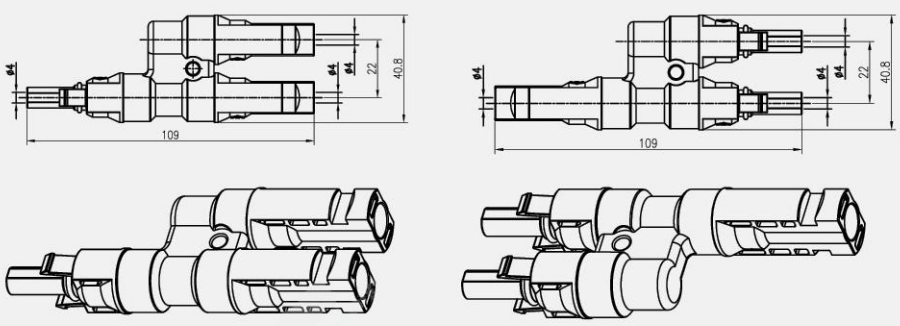

RTPVT3

3 TO 1 MC4 SOLAR CONNECTOR

Quality Maker®
Restarsolar, power the life

WWW.RESTARSOLAR.COM





Application

- Simple on-site processing.
- Acomodates PV cable with different insulation diameters.
- Mating safety provided bykeyed housings.
- Multiple plugging and unplugging cycles.
- High current carrying capacity.

Technical Parameter	
Rated current	40A
Rated voltage	1000V DC
Test voltage	6000v(50Hz, 1 min)
Overvoltage type/pollution degree	CAT II /2
Contact resistance of plug connector	1 mΩ
Contact material	Copper,Tin-plated
Insulation material	PPO/PC
Degree of protection	IP2*/IP65
Flame class	UL94-VO
Safety class	II
Insertion force	≤50N
withdrawal force	≥50N
Temperature range	-40°C~+110°C
Suitablecable	2.5-6.0mm²

Dimensions

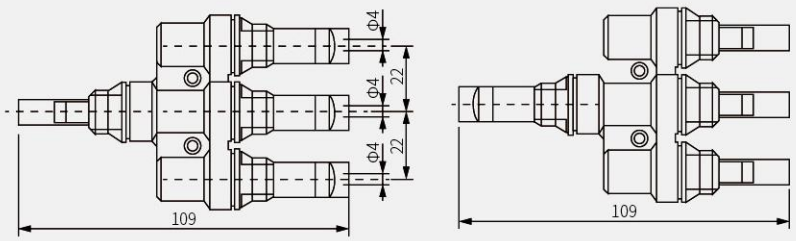

RTPVT4

4 TO 1 MC4 SOLAR CONNECTOR

Quality Maker®
Restarsolar, power the life

WWW.RESTARSOLAR.COM





Application

- Simple on-site processing.
- Acomodates PV cable with different insulation diameters.
- Mating safety provided bykeyed housings.
- Multiple plugging and unplugging cycles.
- High current carrying capacity.

Technical Parameter	
Rated current	40A
Rated voltage	1000V DC
Test voltage	6000v(50Hz, 1 min)
Overvoltage type/pollution degree	CAT II /2
Contact resistance of plug connector	1 mΩ
Contact material	Copper,Tin-plated
Insulation material	PPO/PC
Degree of protection	IP2*/IP65
Flame class	UL94-VO
Safety class	II
Insertion force	≤50N
withdrawal force	≥50N
Temperature range	-40°C~+110°C
Suitablecable	2.5-6.0mm²

Dimensions

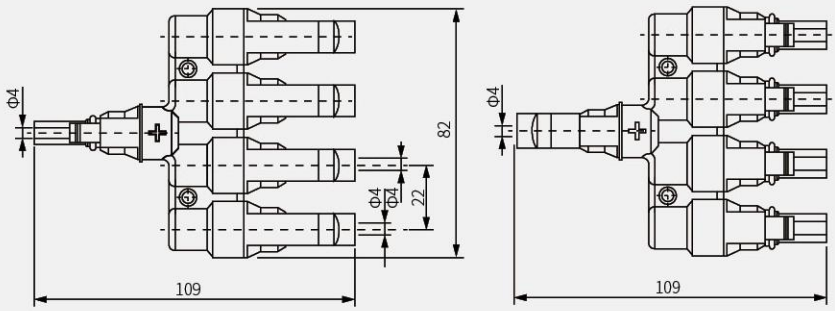

RTPVY2

2 TO 1 MC4 SOLAR CONNECTOR

Quality Maker®
Restarsolar, power the life

WWW.RESTARSOLAR.COM





Structural Characteristics

- Simple on-site processing.
- Acomodates PV cable with different insulation diameters.
- Mating safety provided bykeyed housings.
- Multiple plugging and unplugging cycles.
- High current carrying capacity.

Technical Parameter	
Rated current	30A
Rated voltage	1000V DC
Test voltage	6000v(50Hz, 1 min)
Overvoltage type/pollution degree	CAT II /2
Contact resistance of plug connector	1 mΩ
Contact material	copper,Tin-plated
Insulation material	PPO/PC
Degree of protection	IP2*/IP65
Flame class	UL94-VO
Safety class	II
Insertion force	≤50N
withdrawal force	≥50N
Temperature range	-40°C~+110°C
Suitablecable	8cm

Dimensions

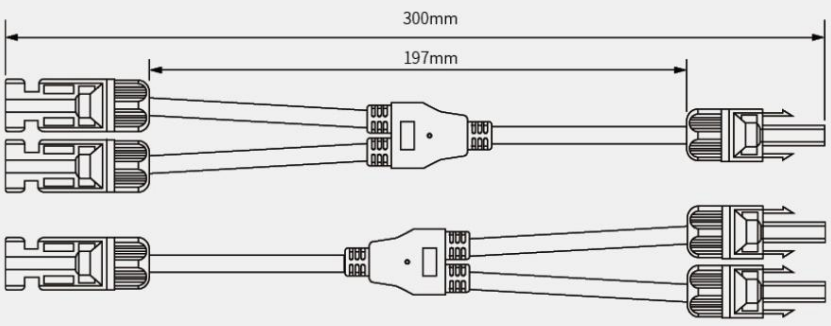

RTPVY3

3 TO 1 MC4 SOLAR CONNECTOR

Restarsolar, power the life

WWW.RESTARSOLAR.COM





Structural Characteristics

- Simple on-site processing.
- Acomodates PV cable with different insulation diameters.
- Mating safety provided bykeyed housings.
- Multiple plugging and unplugging cycles.
- High current carrying capacity.

Technical Parameter	
Rated current	40A
Rated voltage	1000V DC
Test voltage	6000v(50Hz, 1 min)
Overvoltage type/pollution degree	CAT II /2
Contact resistance of plug connector	1 mΩ
Contact material	copper,Tin-plated
Insulation material	PPO/PC
Degree of protection	IP2*/IP65
Flame class	UL94-VO
Safety class	II
Insertion force	≤50N
withdrawal force	≥50N
Temperature range	-40°C~+110°C
Suitablecable	8cm

Dimensions

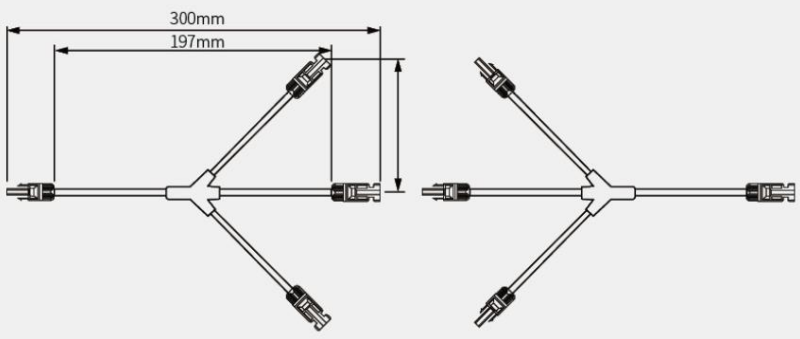

Tel:+86 512-66292101 Email:info@resunsolar.com

RTPVY4

4 TO 1 MC4 SOLAR CONNECTOR

WWW.RESTARSOLAR.COM

Quality Maker®
Restarsolar, power the life





Structural Characteristics

- Simple on-site processing.
- Acomodates PV cable with different insulation diameters.
- Mating safety provided bykeyed housings.
- Multiple plugging and unplugging cycles.
- High current carrying capacity.

Technical Parameter	
Rated current	40A
Rated voltage	1000V DC
Test voltage	6000v(50Hz;1 min)
Over voltage Category/Pollution degree	CAT II /2
Contact resistance of plug connector	1mΩ
Contact materia	copper,Tin-plated
Insulation material	PPO/PC
Degree of protection	IP2*/IP65
Flame class	UL94-VO
Safety class	II
Insertion force	≤50N
withdrawal force	≥50N
Temperature range	-40°C~+110°C
Suitablecable	8cm

Dimensions

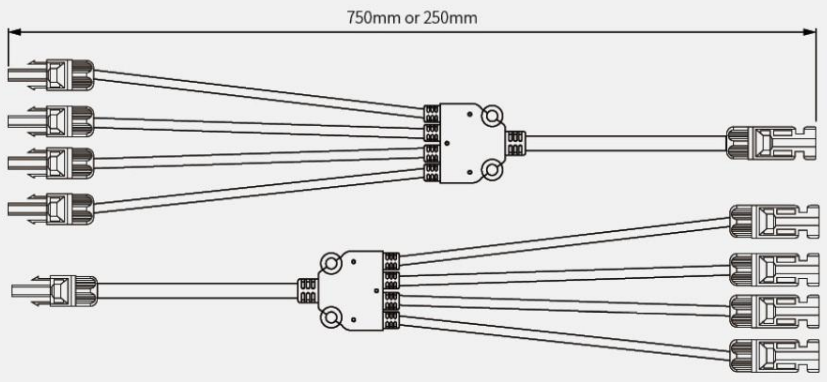

RTPVDC
DIODE SOLAR CONNECTOR

Restarsolar, power the life

WWW.RESTARSOLAR.COM



Structural Characteristics

- The fuse/diode series connectors.
- Low power loss.
- Auto-lock equipment of male and female points enable connection more easy and reliab
- With the capacity of anti-aging and resistance to ultraviolet radiation on the outer cover.
- Popular figure suit most of field installation.
- Simple on-site processing.
- With convenient installation,strong commonality.

Technical Parameter	
Insulation material	PPO/PC
Contact material	copper, Tin-plated
Adapting Current	10A, 15A, 20A, 30A
Rated Voltage	1000V(TUV), 600V(UL)
Test Voltage	8000V(TUV50Hz, 1 min)
Contact Resistance	<0.5m²
Degree Of Protection	IP67
Ambient Temperature Range	-40°C~+85°C
Flame Class	UL94-VO
Safety Class II	II
Pin Dimensions	Φ4mm

Dimensions

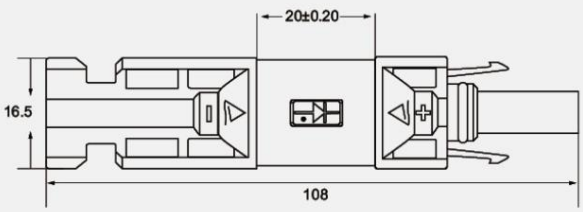

RTPVFC
SOLAR FUSE CONNECTOR

Quality Maker®
Restarsolar, power the life

WWW.RESTARSOLAR.COM



Application

A range of 10x38mm fuse links specifically designed for protecting photovoltaic strings. These fuse links are capable of interrupting low overcurrents associated with faulted photovoltaic string arrays (reversecurrent, multi-array fault).

Structural Characteristics

- Solar PV Fuse Holder, DC 1000Vup to 32A fuse.
- IP67,10x38mm Fuse Copper.

Technical Parameter	
Rated current	10A,12A,15A,16A,20A,25A 30A,32A
Rated voltage	1000V DC
Test voltage	6000v(50Hz;1 min)
Over voltage Category/Pollution degree	CAT III /2
Contact resistance of plug connector	1mΩ
Contact materia	copper,Ag plated
Insulation material	PPO/PC
Degree of protection	IP2*/IP67
Flame class	UL94-VO
Safety class	II
Insertion force	≤50N
withdrawal force	≥50N
Connecting System	Crimp connection
Temperature Range	-40°C~+125°C

Dimensions

